Western Products, PO Box 245038, Milwaukee, WI 53224-9538 • www.westernplows.com

May 1, 2014
Lit. No. 49586, Rev. 10

PRO PLUS® Snowplow

Blades 76901, 76974, 76980
H,A&L 75600
H,A&L, Central Hydraulics 75610

Parts List

A DIVISION OF DOUGLAS DYNAMICS, LLC

TABLE OF CONTENTS

PRO PLUS® BLADE COMPONENTS 4
PRO PLUS HYDRAULICS, A-FRAME, AND LIFT FRAME (H,A&L) ASSEMBLY 6
Lift Frame and A-Frame 6
Hydraulic Unit 8
Lift and Angle Rams 10
Hoses and Fittings 10
Electrical Components 11
Vehicle-Side Harness Diagram – 3-Port, 2-Plug System 12
Vehicle-Side Wiring Diagram – Central Hydraulics 13
Headlamp Kit 14

Blade Components

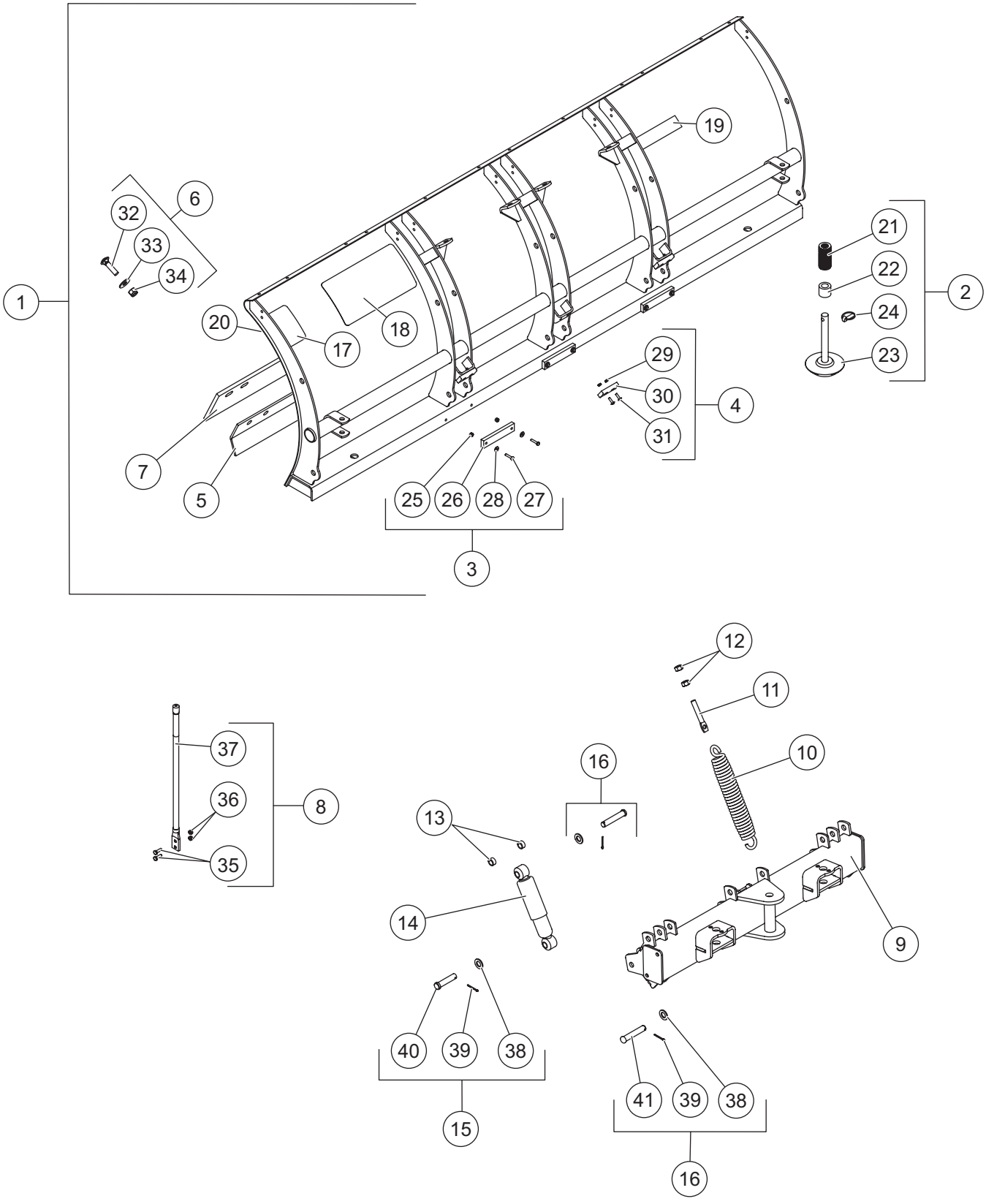

PRO PLUS Blade Components							
Item	**Part**	**Qty**	**Description**	**Item**	**Part**	**Qty**	**Description**
1	66901		9.0' Blade Assembly	8	62595		Blade Guide Kit
	66974		8.5' Blade Assembly	9	66930-1		Quadrant
	66980		8.0' Blade Assembly	10	23039		Trip Spring
2	49071		Shoe Kit	11	90490		5/8-11 x 4 Eyebolt
3	63977		Trip Stop Kit	12	91416		5/8-11 Hex Nut G5
4	63976		Push Stop Kit	13	63211		Spacer .758 ID x 1 OD x .5 LG
5†	66991		9.0' Back Drag Edge	14	63979		Shock Absorber
	66999		8.5' Back Drag Edge	15	93063K		3/4 x 3-1/4 Clevis Pin Kit
	66892		8.0' Back Drag Edge	16	95335		3/4 x 4 Clevis Pin Kit
6	29351		Cutting/Back Drag Edge Bolt Bag	ns	28548		Blade Label Kit, UltraMount®
7	63990		9.0' Cutting Edge Kit (incl. item 6)				
	63985		8.5' Cutting Edge Kit (incl. item 6)				
	63980		8.0' Cutting Edge Kit (incl. item 6)				
Item 2			**49071 Shoe Kit**				
21	91192	29	Round Flat Washer Special	23		1	Heavy-Duty Disc Shoe
22	60045	1	Spacer	24	93010K	1	7/16 x 1-3/4 Linchpin
Item 3			**63977 Trip Stop Kit**				
25		2	1/4-20 Hex Locknut G5	27		2	1/4-20 x 1-1/4 Hex Cap Screw G5
26		1	Bumper	28		2	1/4 Flat Washer
Item 4			**63976 Push Stop Kit**				
29		2	1/4-20 Hex Jam Locknut GB	31		2	1/4-20 x 3/4 Button Cap Screw
30		1	Bumper				
Item 6			**29351 Cutting/Back Drag Bolt Bag**				
32	63986	10	5/8-11 x 2-1/2 Carriage Bolt G5	34	91337	10	5/8-11 Hex Locknut GB
33	90576	10	5/8 Hardened Flat Washer				
Item 8			**62595 Blade Guide Kit**				
35	68494	4	5/16-18 x 1 Hex Cap Screw G5	37	62578	2	Blade Guide, Poly 24" w/Label
36	91332	4	5/16-18 Hex Locknut GB				
Item 15			**93063K 3/4 x 3-1/4 Clevis Pin Kit**				
38	91147	1	3/4 Flat Washer	40		1	3/4 x 3-1/4 Clevis Pin
39	91911K	1	5/32 x 1-1/2 Cotter Pin Kit				
Item 16			**95335 3/4 x 4 Clevis Pin Kit**				
38	91147	1	3/4 Flat Washer	41		1	3/4 x 4 Clevis Pin
39	91911K	1	5/32 x 1-1/2 Cotter Pin Kit				
ns			**28548 Blade Label Kit, UltraMount**				
17	59900	1	Label – Warning/Caution, Snowplows	19	28404	1	Label – ULTRAFINISH™
18	67796	1	Label – UltraMount Attach/Detach	20	28548	1	Label – CONTRACTOR GRADE®
ns = not shown			† = Accessory Only				G = Grade

Lift Frame and A-Frame Components

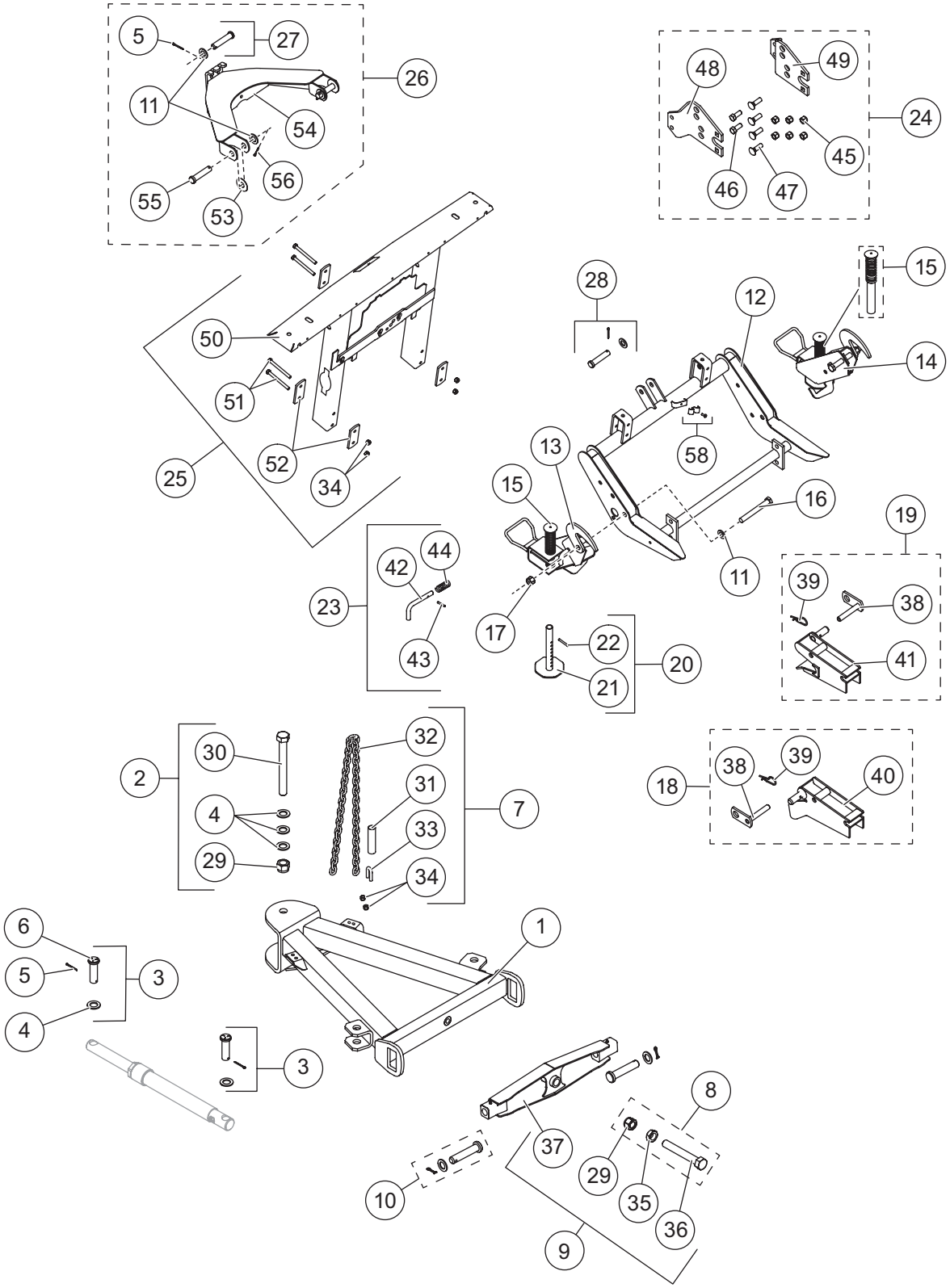

PRO PLUS Lift Frame and A-Frame Components							
Item	**Part**	**Qty**	**Description**	**Item**	**Part**	**Qty**	**Description**
1	66920	1	A-Frame	16	66451	2	3/4-10 x 6 Hex Cap Screw G5
2	63978	1	Pivot Bolt Kit – PP	17	91338	2	3/4-10 Hex Locknut GB
3	63973	4	Ram Pin Kit	18	67858	1	Receiver Kit DS
4	91192	7	Round Flat Washer, Special	19	67859	1	Receiver Kit PS
5	91911K	8	5/32 x 1-1/2 Cotter Pin Kit (pkg of 4)	20	67847	2	Stand Shoe Kit
6	93074	4	1 x 3-1/4 Clevis Pin	21		2	Stand Shoe
7	49033	2	1/4 Grade 43 Chain Assembly	22	67635	2	1/4 x 2 Roll Pin
8	67855	1	Pivot Bolt Kit	23	67844	2	Stand Lock Pin Kit
9	67842-1	1	Pivot Bar Kit	24	67843	1	Pivot Plate Service Kit
10	49645	2	Pivot Bar Pin Kit	25	42351	1	Upper Lift Frame Kit
11	91147	6	3/4 Flat Washer	26	67850-2	1	Lift Arm Kit (incl. item 27)
12	67556-2	1	Lift Frame, Lower	27	68740	1	3/4 x 3-1/2 Clevis Pin Kit
13	67845	1	Stand Assembly – DS	28	93063K	1	3/4 x 3-1/4 Clevis Pin Kit
14	67846	1	Stand Assembly – PS	58	49479-1	1	Hose Bracket Kit
15	48523	2	Plunger w/Spring	ns†	68314-1	1	Hydraulic Unit Cover
Item 2			**63978 Pivot Bolt Kit – PP**				
4	91192	3	Round Flat Washer, Special	30		1	1-8 x 9 Hex Cap Screw G5
29	91340	1	1-8 Hex Locknut GB				
Item 7			**49033 1/4 Grade 43 Chain Assembly (2 per plow)**				
31	65508	1	Plastic Tube	33	90453	1	3/8-16 x 1-1/2 U-Bolt G5
32		1	1/4 x 42 Grade 43 Chain	34	91333	2	3/8-16 Hex Locknut GB
Item 8			**67855 Pivot Bolt Kit**				
29	91340	1	1-8 Hex Locknut GB	36	67552	1	1-8 x 7 Hex Cap Screw G5
35	67748	1	1-8 Hex Jam Nut G5				
Item 9			**67842-1 Pivot Bar Kit**				
8	67855	1	Pivot Bolt Kit	37		1	Pivot Bar
Item 18			**67858 Receiver Kit DS**				
38	67665	1	Receiver Pin	40		1	Receiver DS
39	91965K	1	5/32 Hairpin Cotter				
Item 19			**67859 Receiver Kit PS**				
38	67665	1	Receiver Pin	41		1	Receiver PS
39	91965K	1	5/32 Hairpin Cotter				
Item 23			**67844 Stand Lock Pin Kit**				
42		1	Lock Pin	44	67726	1	Spring Lock Pin, Stand
43	67700	1	3/16 x 1-1/4 Roll Pin				
Item 24			**67843 Pivot Plate Service Kit**				
45	91337	6	5/8-11 Hex Locknut GB	48	67707	1	Pivot Plate A
46	90127	2	5/8-11 x 1-1/2 Hex Cap Screw G5	49	67708	1	Pivot Plate B
47	5572	4	5/8-11 x 2 Carriage Bolt G5				
Item 25			**42351 Upper Lift Frame Kit**				
34	91333	4	3/8-16 Hex Locknut GB	51		4	3/8-16 x 4 Hex Cap Screw G8
50		1	Upper Lift Frame	52		4	Plate – Upper Lift Frame
Item 26			**67850-2 Lift Arm Kit**				
5	91911K	1	5/32 x 1-1/2 Cotter Pin Kit (pkg of 4)	54		1	Lift Arm
11	91147	3	3/4 Flat Washer	55		2	3/4 x 3-1/4 Clevis Pin
27	68740	1	3/4 x 3-1/2 Clevis Pin Kit	56	91962	2	1/8 Hairpin Cotter
53		2	Round Flat Washer – Special				
ns = not shown							G = Grade

† Not used for Central Hydraulics.

Hydraulic Unit Components

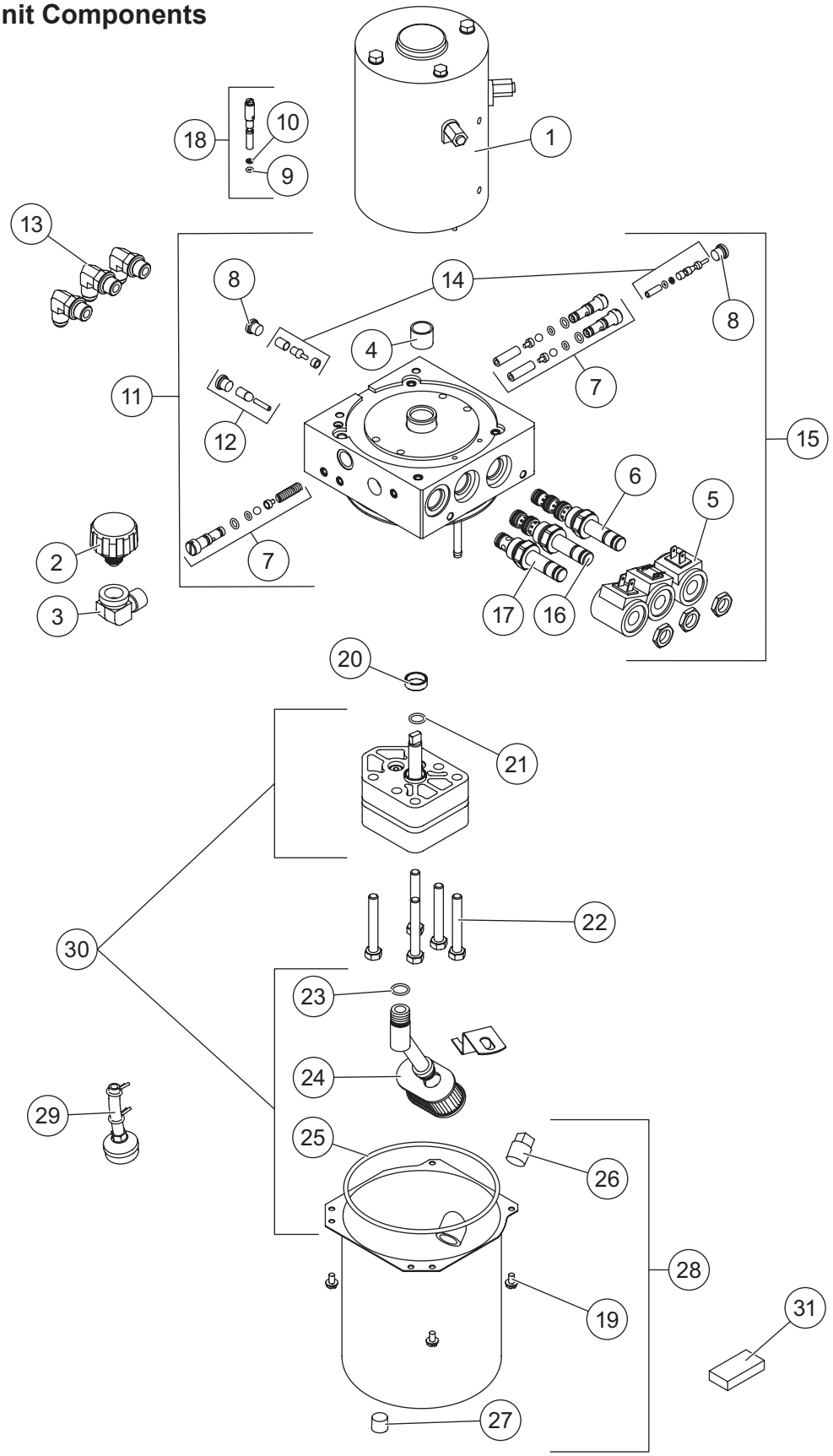

42345 Hydraulic Unit
42348 Hydraulic Unit Service Kit*
(Not used for Central Hydraulics)

Item	Part	Qty	Description	Item	Part	Qty	Description
1	21500-1	1	Motor, 4-1/2"	17	49227K-2	1	Valve, 2-Way w/Nut
2	21727-2	1	Breather Pressure Control	18	56662	1	Quill Assembly
3	21726	1	Elbow, Street 90° 3/8 M NPTF/3/8 F NPTF	19	66607	4	10-24 x 5/16 Machine Screw Slotted Hex Washer Head
4**	64596-1	1	Sleeve Bearing & Shaft Seal Kit	20‡	66515	1	Pump Shaft Seal
5	49230K-2	3	Coil w/Spades	21	56274	1	O-Ring – 013
6	49229K-1	1	Cartridge Valve, 4-Way w/Nut	22	90073	5	5/16-18 x 2-1/4 Hex Cap Screw
7	49138K-3	1	Relief Valve Kit (2 sets)	23	56416	1	O-Ring – 014
8	92960	2	Plug, Hex Socket –3 M ORB	24	56789-3	1	Suction Filter
9	25622	1	O-Ring – 006	25	66519	1	O-Ring – 2-250
10	56315	1	Back-Up Ring – 006	26	92079	1	Plug, Square 3/8 NPTF
11	42346	1	Manifold Assembly	27	92095	1	Plug, Hex Socket 1/4 NPTF w/Thread Sealant – SAE 130109N/P
12	56507	1	Bypass Check Valve Kit				
13	56615-1	3	Elbow, 90° –6 M JIC/–6 M ORB	28	21830	1	Reservoir Kit
14	49226K	1	Poppet Check Valve Kit	29	66405	1	Return Screen Assembly
15	42347	1	Valve Manifold Assembly	30	21501-1	1	Hydraulic Pump Kit
16	66608-1	1	Cartridge Valve, 3-Way w/Nut	31	73897	1	Magnet
O-Ring Service Kits							
–	56657-3	–	O-Ring & Back-Up Ring Kit	–	49259-2	–	Seal Kit, 3-Way & 4-Way Valve
–	49258-2	–	Seal Kit, 2-Way Valve				

* Includes 42345 Hydraulic Unit and Plow-Side Electrical Components (p. 11).
** Use 64589 tool for bearing sleeve replacement (includes 1 bearing).
‡ Use 28856 tool for pump shaft seal replacement (includes 1 seal).

Lift and Angle Ram Components

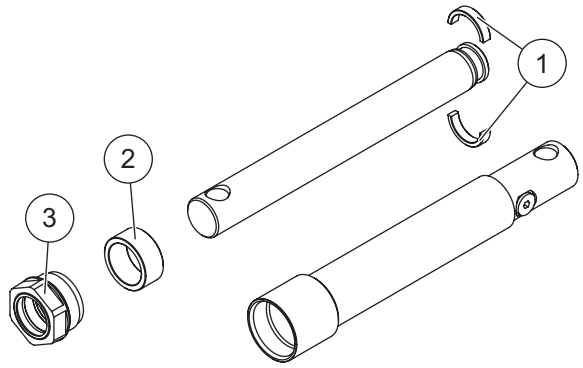

56538K Lift Ram Assembly 1-1/2 x 8			
Item	**Part**	**Qty**	**Description**
1	64650	1	Split Bearing Kit 1-1/2"
2	56537	1	Spacer
3	48985	1	Gland Nut Assembly

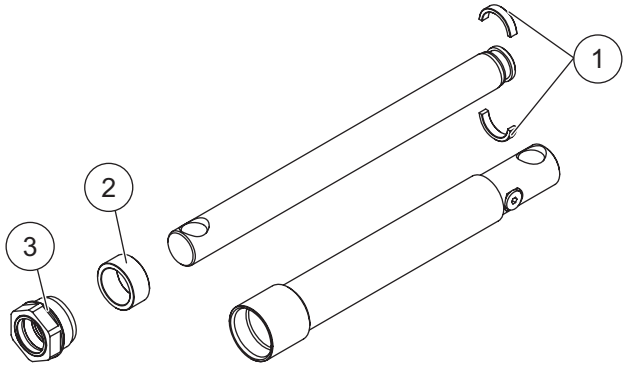

64148 Angle Ram Assembly 1-1/2 x 12			
Item	**Part**	**Qty**	**Description**
1	64650	1	Split Bearing Kit 1-1/2"
2	56537	1	Spacer
3	48985	1	Gland Nut Assembly

Hoses and Fittings

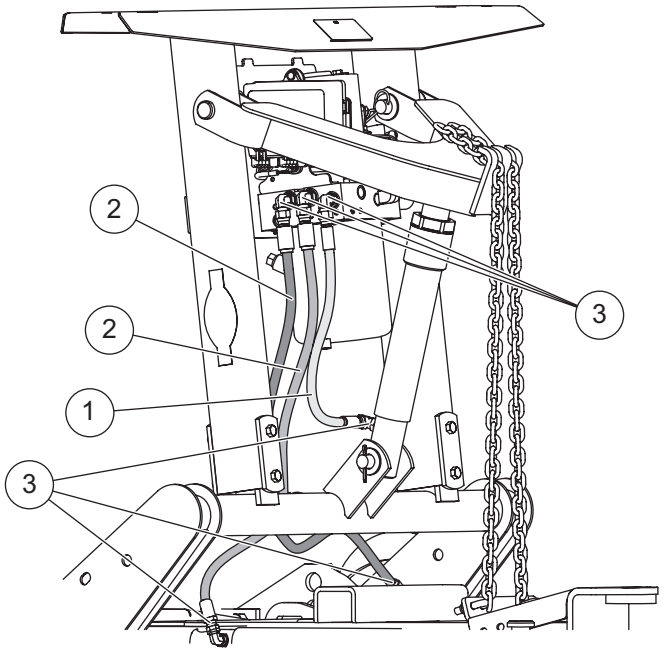

Hoses and Fittings							
Item	**Part**	**Qty**	**Description**	**Item**	**Part**	**Qty**	**Description**
1†	41094	1	Hose, 1/4 x 18 Kit w/F JIC Ends	3	56615-1	6	Elbow, 90° –6 M JIC/–6 M ORB
2†	49532	2	Hose, 3/8 x 36 Kit w/F JIC Ends				
F = Female				M = Male or Metric			

† Not used for Central Hydraulics.

Electrical Components

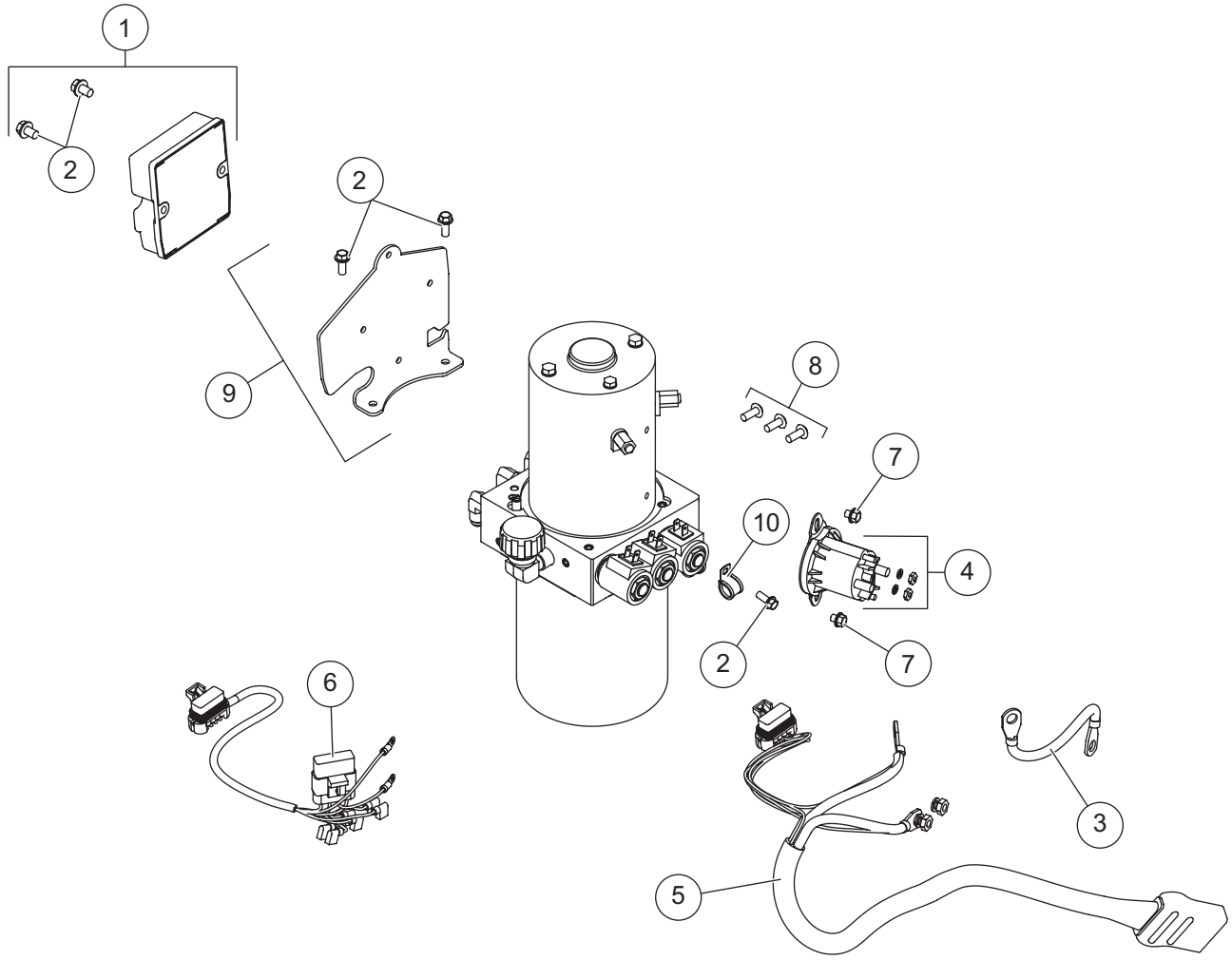

Plow-Side Electrical Components							
Item	**Part**	**Qty**	**Description**	**Item**	**Part**	**Qty**	**Description**
1	49567	1	Plow Module, 2-Port	7	29099	2	1/4-20 x 1/4 Hex Washer-Head Thread-Rolling Screw
2	44355	5	1/4-20 x 5/8 Hex Washer-Head Thread-Rolling Screw	8	98043	3	3/8-16 x 1 Button Cap Screw
3	29071	1	Cable Assembly 8"	9	42287	1	Bracket – Plow Module
4	42902	1	Motor Relay Kit FLEET FLEX	10	65340	1	Clamp Loop #10
5	42015	1	Snowplow Battery Cable	ns	61246	1	Cable Boot
6	28581-1	1	Harness Plow Control, 3-Solenoid	ns	56099	1	Dielectric Grease
Vehicle-Side Electrical Components							
* †	42014	1	Vehicle Battery Cable	ns	61548K	1	Plug Cover Kit
* †	28587	1	Vehicle Control Harness				
ns**	26498	1	Vehicle Control Harness – Central Hydraulics				
ns = not shown							

* For diagram, see Vehicle-Side Harness Diagram.
** For diagram, see Vehicle-Side Harness Diagram – Central Hydraulics.
† Not used for Central Hydraulics.

Vehicle-Side Harness Diagram
3-Port, 2-Plug System

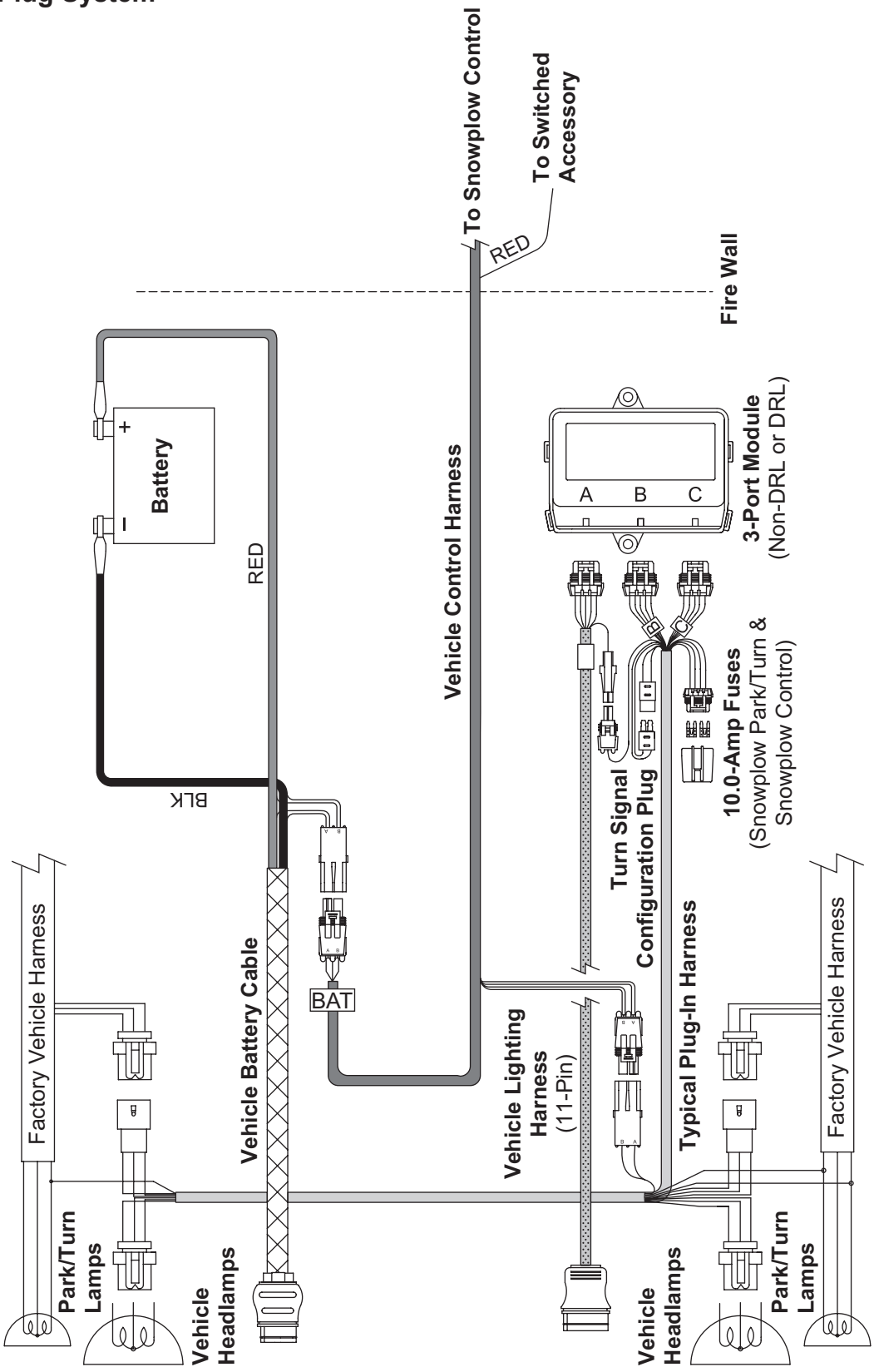

Vehicle-Side Harness Diagram
Central Hydraulics

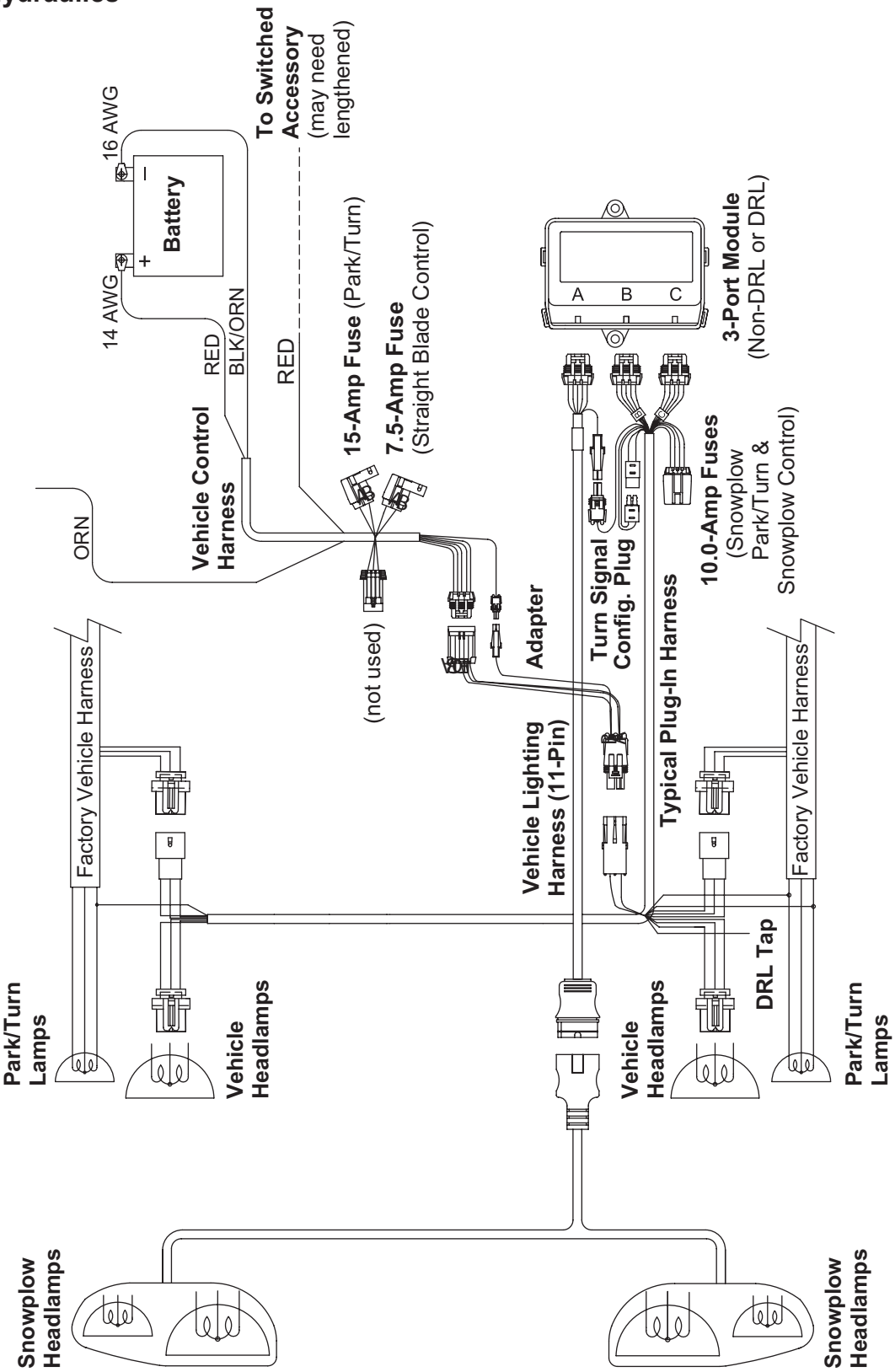

Headlamp Kit

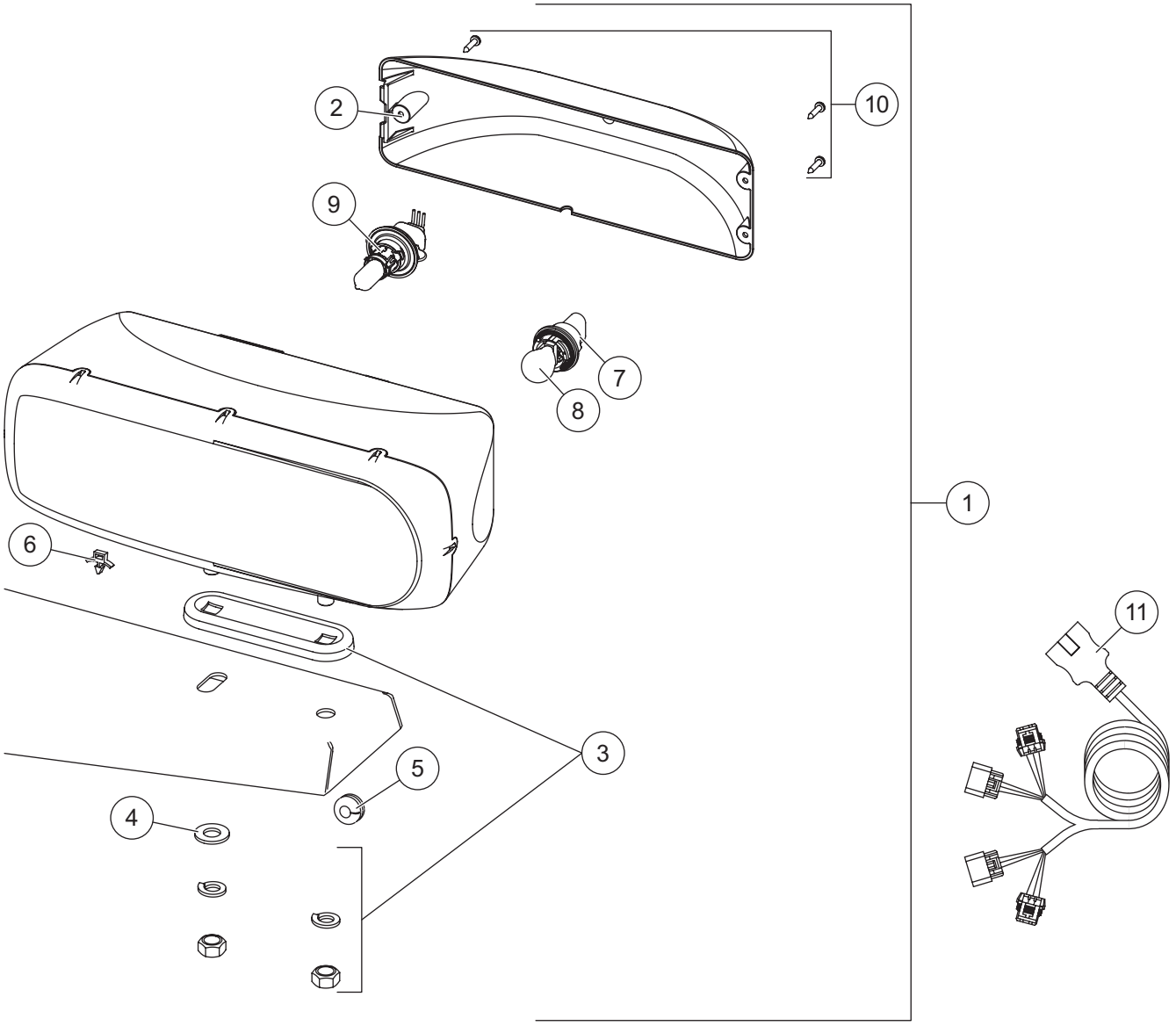

28800-1 Headlamp Kit (Pair)							
Item	**Part**	**Qty**	**Description**	**Item**	**Part**	**Qty**	**Description**
1	28801-1	1	Headlamp Service Kit – DS	6	56595	7	Cable Tie Anchor
ns	28802-1	1	Headlamp Service Kit – PS	7	28805	2	Park/Turn Socket Service Kit
2	28803-1	2	Rear Cover Kit (fits 2- or 3-screw)	8		2	Park/Turn Bulb (trade no. 4157NAK)
3	28804	2	Mounting Hardware Kit	9	28806	2	H13 Headlamp Bulb Service Kit
4	4433	2	1/2 Flat Washer – Type B, Wide	10	28808-1	2	Cover Screws Service Kit (pkg of 3)
5	66130	2	Rubber Grommet	11	28213W	1	Harness Service Kit
ns = not shown							

Western Products
PO Box 245038
Milwaukee, WI 53224-9538
www.westernplows.com

A DIVISION OF DOUGLAS DYNAMICS, LLC

Copyright © 2014 Douglas Dynamics, LLC. All rights reserved. This material may not be reproduced or copied, in whole or in part, in any printed, mechanical, electronic, film or other distribution and storage media, without the written consent of Western Products. Authorization to photocopy items for internal or personal use by Western Products outlets or snowplow owner is granted.

Western Products reserves the right under its product improvement policy to change construction or design details and furnish equipment when so altered without reference to illustrations or specifications used. Western Products or the vehicle manufacturer may require or recommend optional equipment for snow removal. Do not exceed vehicle ratings with a snowplow. Western Products offers a limited warranty for all snowplows and accessories. See separately printed page for this important information. The following are registered (®) or unregistered (™) trademarks of Douglas Dynamics, LLC: CONTRACTOR GRADE®, PRO PLUS®, ULTRAFINISH™, UltraMount®, WESTERN®.

Printed in U.S.A.